Low-medium position cisterns

BIBLO UNO technical data sheet

KARIBA®
La regina del tuo bagno

Sommario

DESCRIPTION	3
FEATURES	3
TECHNICAL NOTES	3
STANDARD SUPPLY	4
ON DEMAND	4
PACAKGING	4
PACKAGING	5
MODELS:	5
DIMENSIONS	6
SPARE PARTS	7
LIST	7
ACCESSORIES ON DEMAND	8

BIBLO UNO

Exposed cistern for low or medium position installations.

DESCRIPTION

BIBLO UNO exposed flush cistern is suitable for low- or medium-position installations.
BIBLO UNO is made with an anti-ageing ABS body and is equipped with a side button for flushing with the possibility of interruption.
KARIBA exposed cisterns are equipped with a fast and silent float valve with various water connection possibilities.
Each cistern is produced with top quality materialsand with components 100% tested in production with water supply.
EN 14055 CL1 - 9 - NL I - VR II regulation.

FEATURES

Features and plus
Low-medium position
Single button with rinse interruption option
9lt in-wall cistern (adjustable to 6lt)
100% Made in Italy
NORMA-PLUS float valve, acoustic cl.1, LGA-TUV approved
Pneu version available. Suitable for people with motor disabilities

TECHNICAL NOTES

- Capacity 9 lt with possibility of adjustment to 6 lt
- Single side button with rinse interruption option
- ABS body with anti-ageing treatment
- Anti-condensation and soundproofing insulation
- Left or right and rear water connection in the centre

S

STANDARD SUPPLY

- Stop valve for universal installation (according to code)
- Wall mounting accessory kit
- Discharge pipe
- Connection gaskets
- Norma-Plus float valve, acoustic cl.1, LGA-TUV

ON DEMAND

- Pneumatic lifting device cod. 400021 (standard for code 336430)
- Penumatic controls

PACAKGING

CODE	PCS	LxWxH	WEIGHT
BIBLO UNO	1	439x138x420 mm	3 kg

PACKAGING

packaging		pcs	L-P-H
	single	1	439x138x420
	multiple	5	720x450x443
	pallet	100	118x120x2220

MODELS:

CODE	DESCRIPTION
336400	BIBLO UNO WHITE- PIPE Ø 40 MM
336411	BIBLO UNO white,pipe Ø 40 mm WITHOUT STOP-VALVE
336430	BIBLO UNO WHITE PNEU PIPE Ø 40 mm WITHOUT REMOTE BUTTON

S

DIMENSIONS

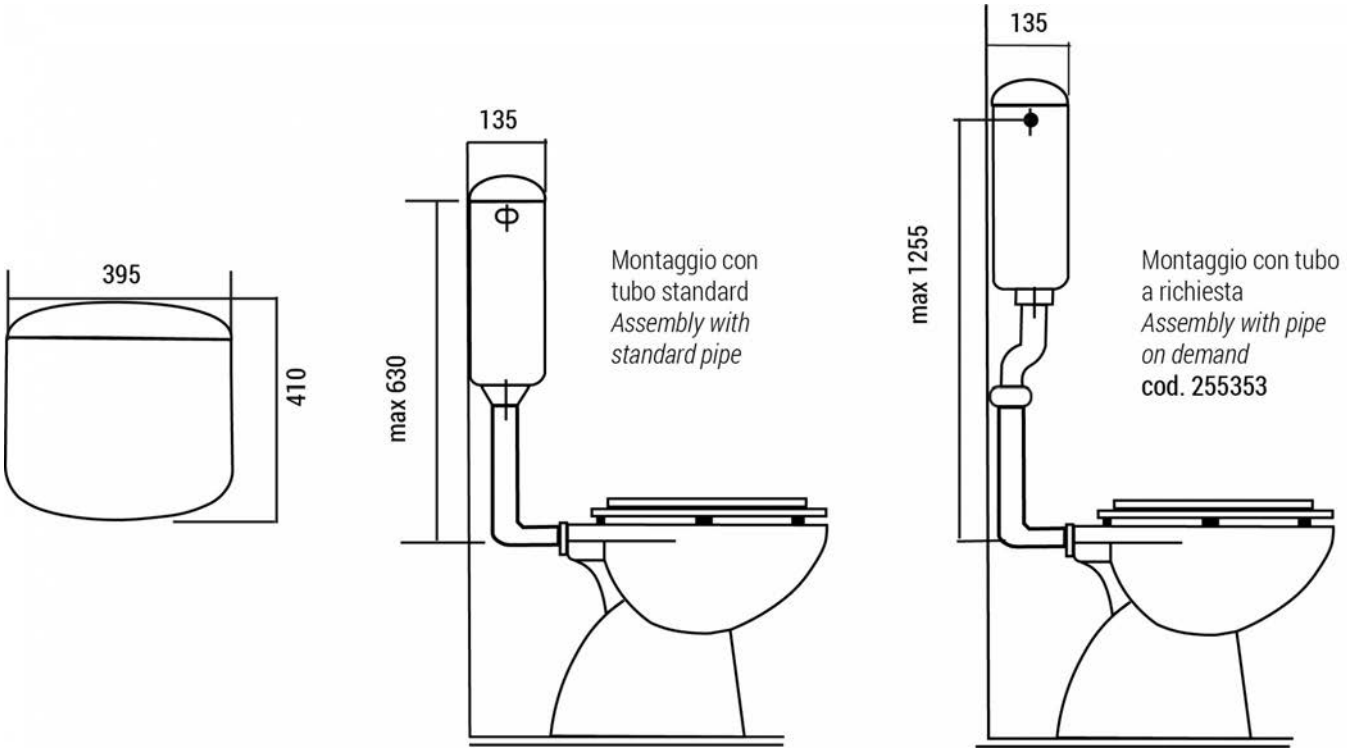
395
410
135
max 630
Montaggio con
tubo standard
Assembly with
standard pipe
135
max 1255
Montaggio con tubo
a richiesta
Assembly with pipe
on demand
cod. 255353

SPARE PARTS

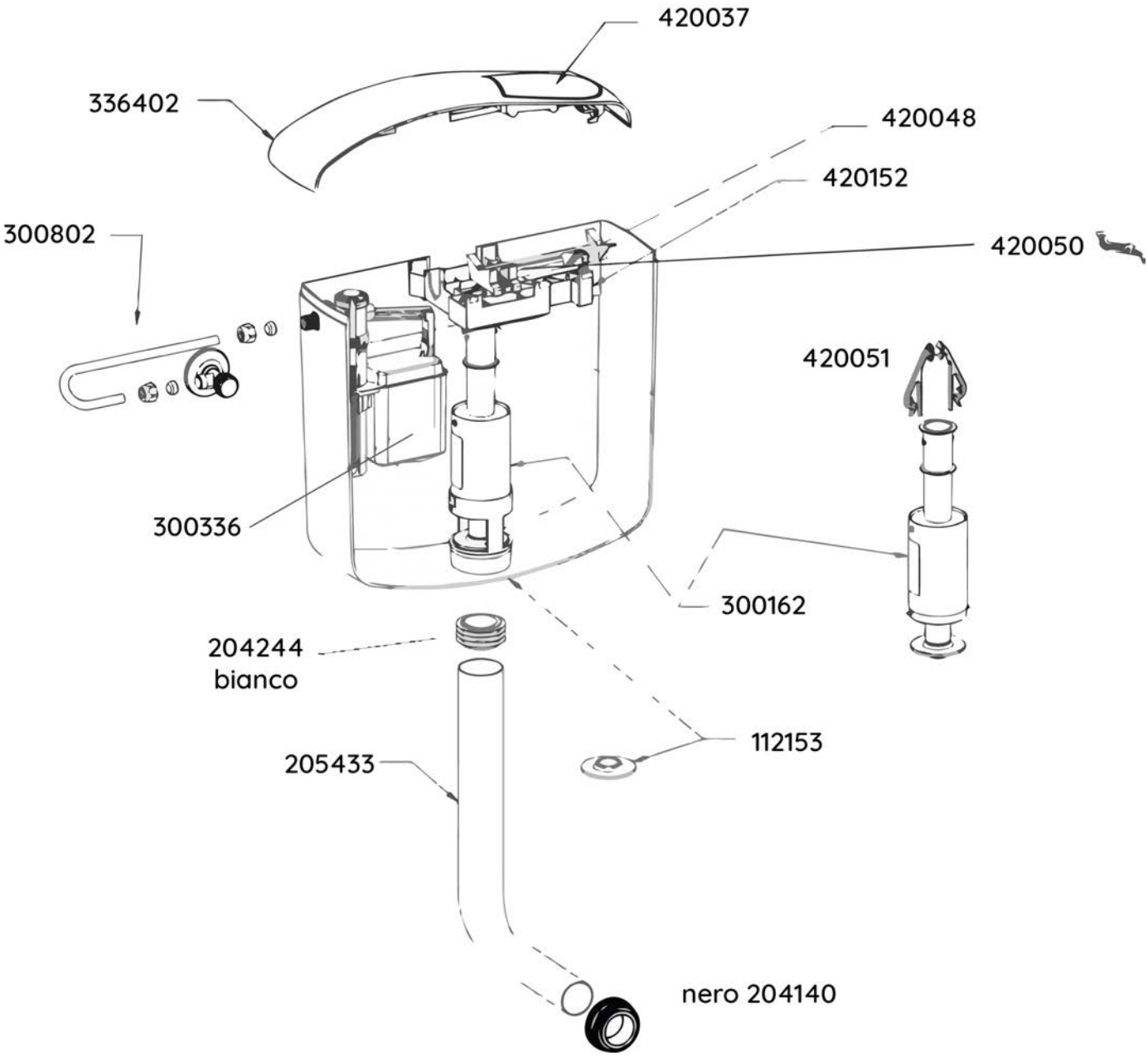

S

LIST

CODE	DESCRIPTION
420152	Lever group with anchor
420051	Anchor
300802	Stop valves
336402	Lid with flush button
420037	Flush button

CODE	DESCRIPTION
300336	NORMA-PLUS float valve, acoustic cl.1, LGA-TUV approved
300162	Discharge valve
112153	Silicon gasket
300842	Cistern fixing accessories kit and connection gaskets Ø40
205433	Discharge pipe 50x40x320mm
204244	White clamp gasket for pipe coupling
204140	Black clamp gasket ø 40 mm for WC coupling
420048	Total discharge lever kit
420050	Slingbar lever

ACCESSORIES ON DEMAND

CODE	DESCRIPTION
400021	Pneumatic lifting device (standard for code 336430)
215313	Pipe 50x32x1000mm
215363	Pipe 50x32x600mm
255353	Dismountable pipe 50x32x935mm
204132	Black clamp gasket ø 32 mm for WC coupling
400101	Flush-mounted white pneu button
400103	Wall-mounted white pneu button
300386	"Norma" float-valve 3/8"